KB4AL/80~500

Bellows Couplings

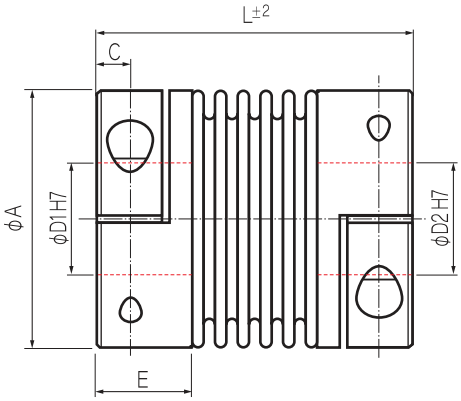

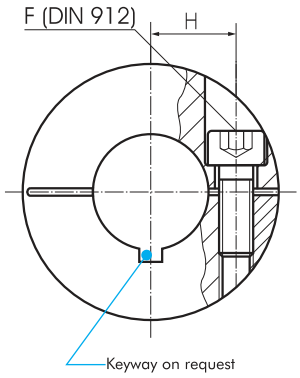

Order Code: KB 4AL / 80 - 91 - 15 - 20 - S

Type / Size | Length | Ø D1 (H7) | Ø D2 (H7) | Options

	Torque	Dimensions (mm)							Technical Ratings								
		L	Ø A	D1/D2	H	C	E	F	Mass	Moment of Inertia	Spring Stiffness			Misalignment			max Speed
	T_{KN} (Nm)	Length (±2)	Outer Ø	Bore Sizes (H7)				Screw (DIN 912) T_A (Nm)	(kg)	J (g m²)	torsional C_T 10^3 (Nm/rad)	radial C_R (N/mm)	axial C_A (N/mm)	radial ΔKr (mm)	axial ΔKa (mm)	angular ΔKw (°)	rpm
KB4AL/80	80	91	82	14-42	28	11	33.5	M10	0.8	0.90	128	1200	80	0.2	0.5	1.5	6900
		102						72	0.85	0.95	75	400	50	0.25	0.8	2	6900
KB4AL/150	150	91	82	19-42	28	11	33.5	M10	0.9	1.0	155	2020	145	0.2	0.5	1.5	6900
		102						84	0.95	1.05	105	595	85	0.25	0.5	2	6900
KB4AL/200	200	101	90	22-45	31	13	38	M12	1.17	1.49	175	2500	145	0.2	0.5	1.5	6400
		113						125	1.21	1.57	120	460	82	0.25	0.8	2	6400
KB4AL/300	300	105	110	30-60	40	13	38	M12	1.62	3.28	502	6300	280	0.2	0.5	1.5	6000
		116						145	1.66	3.37	285	1400	145	0.25	0.8	2	6000
KB4AL/500	500	112	122	35-65	42	15	42	M12	2.4	6.4	690	7790	100	0.2	0.5	1.5	5000
		123						145	2.5	6.7	320	970	85	0.25	1.0	2	5000

Aluminium Collet Clamps reduce mass and moment of inertia.

Material: Bellows - Stainless Steel
Hubs - Aluminium

Temperature Range: -30° ~ 120° C