KBK/CI-10~500

Safety Coupling

with Inner Cone

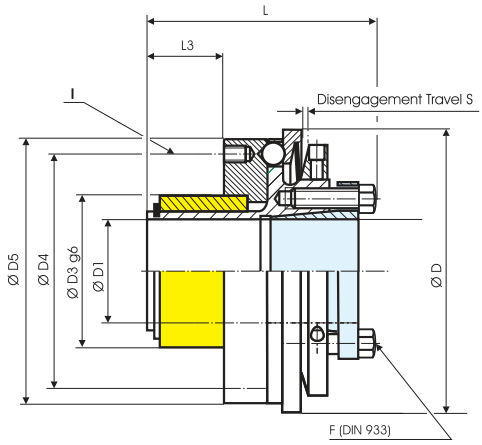

Order Code: KBK/CI - 60 - 20H7 - 20Nm - C oder D - 2

Type - Size | Bore D1(H7) | Disengagement Torque | Overload Torque Range

Single Position =C

D= Multi Position Engagement

KBK/CI-x	Dimensions (mm)										Technical Ratings				
	Ø D	Ø D1	Ø D3	Ø D4	Ø D5	L	L3	S	I	F	Overload Torque adjustable		Maximum Speed	Mass	Moment of Inertia
	Outer Ø	Bore Sizes (H7) min ~ max							6 x	Screw (DIN 933) T_A (Nm)	1 TKN (Nm)	2 TKN (Nm)	rpm. (1/min)	(kg)	J (kg cm²)
-10	49	6-14	24	30	47	51	8	0.7	M3	M3 / 4	3-7	5-10	12000	0.18	0.4
-30	64	12-20	30	46	60	51	9	1.2	M4	M5 / 6	5-15	10-30	9400	0.54	2.2
-60	79	15-25	36	50	75	61	16	1.2	M5	M6 / 8.5	13-35	20-65	7800	1	6.2
-80	94	20-35	48	65	90	72	22	2	M6	M6 / 14	15-40	30-80	6400	1.7	15
-150	94	20-35	48	65	90	72	22	2	M6	M6 / 14	50-130	65-150	5500	1.7	15
-200	109	20-40	52	70	105	77	25	2	M6	M6 / 14	30-90	80-200	5500	2	24
-300	119	30-46	58	76	115	92	31	2	M8	M8 / 20	60-200	150-300	5000	3.3	49
-500	129	35-50	66	110	125	112	33	2	M8	M8 / 26	80-250	200-500	4500	4.7	83

- Keyway acc. DIN 6885 optional
- Temperature Range: -30°C ~ 120°C