BK2

WITH CLAMPING HUB

15 - 10,000 Nm

ABOUT

FEATURES

- easy to mount
- Optional: bolt tensioning system in size 800 and up
- light weight and low moment of inertia

MATERIAL

- **Bellows:** high grade stainless steel
- **Hubs:** see table

DESIGN

Two clamping hubs concentrically mounted to flexible bellows.
Brief overloads of up to 1.5x the rated torque are acceptable.

NEW

Advantage:
reduce screw tightening torques by up to 90% by using multiple smaller screws to create the same tension.

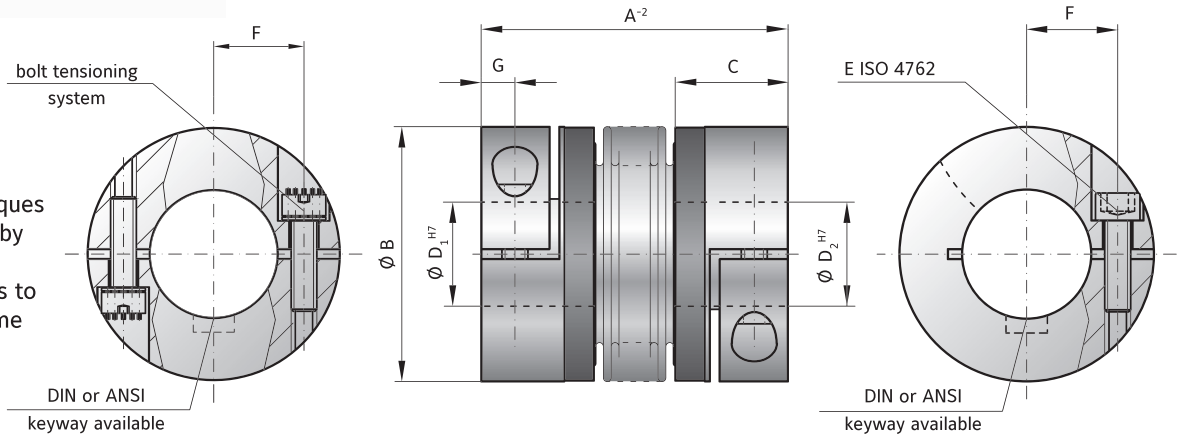

MODEL BK2

SIZE		15			30			60			80			150			200			300			500			800		1500		4000	6000	10000
Rated torque (Nm)	T_{KN}	15			30			60			80			150			200			300			500			800		1500		4000	6000	10000
Overall length (mm)	A^{-2}	59	66	99	69	77	113	83	93	130	94	106	143	95	107	144	105	117	163	111	125	200	133	146	169	140	179	166	230	225	252	288
Outside diameter (mm)	B	49			55			66			81			81			90			110			124			134		157		200	253	303
Fit length (mm)	C	22			27			31			36			36			41			43			51			45		55		85	107	129
Inside diameter possible from Ø to Ø H7 (mm)	D_1/ D_2	8-28			10-30			12-35			14-42			19-42			22-45			24-60			35-60			40-75		50-80		50-90	60-140	70-180
Fastening screw ISO 4762	E	M5			M6			M8			M10			M10			M12			M12			M16			2x M16*		2x M20*		2x M24*	2x M24*	2x M30*
Tightening torque of the fastening screw (Nm)	E	8			15			40			50			70			120			130			200			250		470		1200	1200	2400
Distance between centerlines (mm)	F	17			19			23			27			27			31			39			41			2x48		2x55		2x65	2x90	2x117
Distance (mm)	G	6.5			7.5			9.5			11			11			12.5			13			16.5			18		22.5		28	35	42
Moment of inertia (10^{-3} kgm²)	J_{ges}	0.06	0.07	0.08	0.12	0.13	0.14	0.32	0.35	0.4	0.8	0.85	0.9	1.9	2	2.1	3.2	3.4	3.6	7.6	7.9	8.3	14.3	14.6	14.8	16.2	17	43	45	165	495	1214
Hub material		Al optional steel			Al optional steel			Al optional steel			Al optional steel			steel optional AL			steel optional AL			steel optional AL			steel optional AL			steel		steel		steel	steel	steel
Approximate weight (kg)		0.16			0.26			0.48			0.8			1.85			2.65			4			6.3			5.7		11.5		28.8	49.4	80.9
Torsional stiffness (10^3 Nm/rad)	C_T	20	15	14	39	28	27	76	55	54	129	85	84	175	110	97	191	140	135	450	350	340	510	500	400	780	711	1304	1180	3400	5700	10950
Axial ± (mm)	Max. values	1	2	3	1	2	3	1.5	2	3	2	3	4	2	3	4	2	3	4	2.5	3.5	4.5	2.5	3.5	4.5	3.5	4.5	3.5	4.5	3.5	3	3
Lateral ± (mm)	Max. values	0.15	0.2	1	0.2	0.25	1	0.2	0.25	1	0.2	0.25	1	0.2	0.25	1	0.25	0.3	1	0.25	0.3	1	0.3	0.35	1	0.35	1	0.35	1	0.4	0.4	0.4
Angular ± (degree)	Max. values	1	1.5	2	1	1.5	2	1	1.5	2	1	1.5	2	1	1.5	2	1	1.5	2	1	1.5	2	1	1.5	2	1.5	2	1.5	2	1.5	1.5	1.5
Axial spring stiffness (N/mm)	C_a	25	15	84	50	30	118	72	48	165	48	32	144	82	52	130	90	60	280	105	71	605	70	48	85	100	285	320	440	565	1030	985
Lateral spring stiffness (N/mm)	C_r	475	137	140	900	270	224	1200	420	337	920	290	401	1550	435	500	2040	610	750	3750	1050	1200	2500	840	614	2000	1490	3600	1700	6070	19200	21800

* 180° opposed in each clamping hub.