BK7

WITH EXPANDING SHAFT

15 - 300 Nm

ABOUT

FEATURES

- for hollow shaft mounting
- short design saves installation space
- solution for mismatched shaft / bore

MATERIAL

- **Bellows:** high grade stainless steel
- **Hubs:** see table
- **Expanding mandrel system:** steel

DESIGN

One clamping hub on one end with an expanding shaft on the other end. Brief overloads of up to 1.5x the rated torque are acceptable.

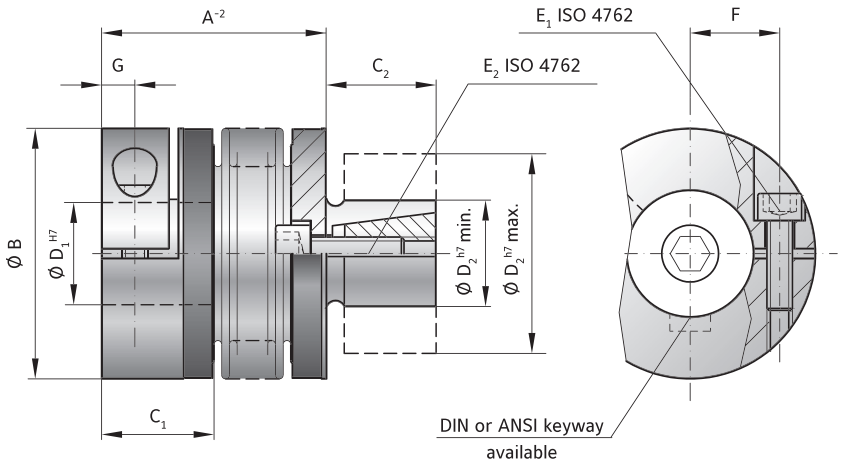

MODEL BK7

SIZE			15		30		60		150		300	
Rated torque	(Nm)	T_{KN}	15		30		60		150		300	
Overall length	(mm)	A^{-2}	45	52	53	61	62	72	71	83	84	98
Outside diameter	(mm)	B	49		55		66		81		110	
Fit length	(mm)	C_1	22		27		32		36		43	
Fit length	(mm)	C_2	20		25		27		32		45	
Inside diameter possible from Ø to Ø H7	(mm)	D_1	8-28		10-30		12-35		19-42		30-60	
Shaft diameter from Ø to Ø h7	(mm)	D_2	13-25		14-30		23-38		26-42		38-60	
Fastening screw ISO 4762		$E_{1/2}$	M5		M6		M8		M10		M12	
Tightening torque of the fastening screw	(Nm)	$E_{1/2}$	8		14		38		65		120	
Distance between centerlines	(mm)	F	17		19		23		27		39	
Distance	(mm)	G	6.5		7.5		9.5		11		13	
Moment of inertia	(10^{-3} kgm²)	J_{ges}	0.07	0.08	0.14	0.15	0.23	0.26	2.2	2.4	6.5	8.9
Hub material			Al		Al		Al		steel		steel	
Approximate weight	(kg)		0.15		0.3		0.4		1.7		4	
Torsional stiffness	(10^3 Nm/rad)	C_T	20	15	39	28	76	55	175	110	450	350
Axial	± (mm)	Max. values	1	2	1	2	1.5	2	2	3	2.5	3.5
Lateral	± (mm)	Max. values	0.15	0.2	0.2	0.25	0.2	0.25	0.2	0.25	0.25	0.3
Angular	± (degree)	Max. values	1	1.5	1	1.5	1	1.5	1	1.5	1	1.5
Axial spring stiffness	(N/mm)	C_a	20	12	50	30	72	48	82	52	105	71
Lateral spring stiffness	(N/mm)	C_r	315	108	730	230	1200	380	1550	435	3750	1050

ORDERING EXAMPLE	BK7	150	71	32	22.23	XX
Model	●					Special designation only (e.g. special bore tolerance).
Size		●				
Overall length mm			●			
Bore D1 H7				●		
Shaft D2 f7					●	

For custom features place an XX at the end of the part number and describe the special requirements (e.g. BK7 / 150 / 71 / 32 / 22.23 / XX; XX=finely balanced for 25,000 rpm)

All data subject to change without notice.