BKC

WITH COMPACT CLAMPING HUB

15 - 500 Nm

ABOUT

FEATURES

- for space restricted installations
- light weight and low moment of inertia
- easy to mount

DESIGN

Two clamping hubs concentrically mounted to flexible bellows.
Brief overloads of up to 1.5x the rated torque are acceptable.

MATERIAL

- **Bellows:** high grade stainless steel
- **Hubs:** see table

Optional:
self-opening clamp system to open the bore during installation and removal by backing out the clamping screw.

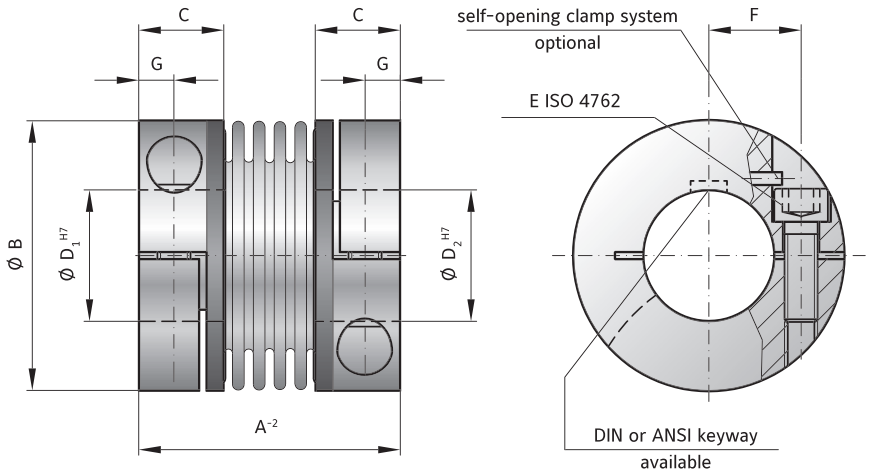

MODEL BKC

SIZE		15	30	60	150	300	500
Rated torque (Nm)	T_{KN}	15	30	60	150	300	500
Overall length (mm)	A^{-2}	48	58	67	78	94	100
Outside diameter (mm)	B	49	56	66	82	110	123
Fit length (mm)	C	16.5	21	23	27.5	34	34
Inside diameter possible from Ø to Ø H7 (mm)	D_1/D_2	8-28	12-32	14-35	19-42	24-60	32-75
Fastening screw ISO 4762	E	M5	M6	M8	M10	M12	M12
Tightening torque of the fastening screw (Nm)	E	8	15	40	75	120	125
Distance between centerlines (mm)	F	17.5	20	23	27	39	45
Distance (mm)	G	6.5	7.5	9.5	11	13	13
Moment of inertia (10^{-3} kgm²)	$J_{ges.}$	0.05	0.1	0.26	0.65	6.3	9
Hub material		AL	AL	AL	AL	steel	steel
Approximate weight (kg)		0.13	0.21	0.37	0.72	3.26	3.52
Torsional stiffness (10^3 Nm/rad)	C_T	23	31	72	141	157	290
Axial ± (mm)	Max. values	1	1	1.5	2	2	2.5
Lateral ± (mm)	Max. values	0.2	0.2	0.2	0.2	0.2	0.2
Angular ± (degree)	Max. values	1	1	1	1	1	1
Axial spring stiffness (N/mm)	C_a	30	50	67	77	112	72
Lateral spring stiffness (N/mm)	C_r	315	366	679	960	2940	2200
Speed max. with G = 2.5 balancing (min^{-1})		80,000	70,000	60,000	50,000	40,000	30,000

ORDERING EXAMPLE	BKC	60	26	22.23	XX
Model	●				Special designation only (e.g. special bore tolerance).
Size		●			
Bore D1 H7			●		
Bore D2 H7				●	

For custom features place an XX at the end of the part number and describe the special requirements (e.g. BKC / 60 / 26 / 22.23 / XX; XX=finely balanced for 25,000 rpm)