Serie Light

SR200
Nylon Cable Chain

Inner height (D) 12 mm

Single link construction with central anti-friction pivot.
Very smooth chain, particularly suitable for small automatic machines like printers, measurements equipment etc.

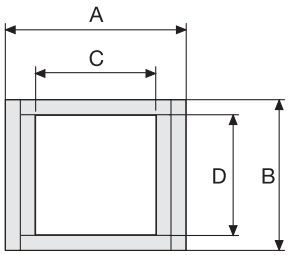

Technical characteristics when self-supported	
Speed	10 m/s
Acceleration	50 m/s²

For higher requirements please consult our technical dept.

A mm	B mm	C mm	D mm	R mm	Weight/m kg	Chain Part Number
18	15	12	12	018-030-040	0,13	**SR20012□□□***
31	15	25	12	018-030-040	0,14	**SR20025□□□***
41	15	35	12	018-030-040	0,15	**SR20035□□□***

**Complete the code by inserting the value of the radius (R): Ex. SR20012 0 1 8*

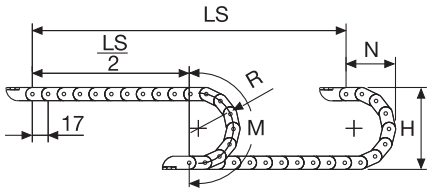

R mm	H mm	N mm	M mm
018	51	45	95
030	75	55	130
040	95	70	165

Length of chain (L)
Half travel distance $(\frac{LS}{2})$
plus length of curve (M)

$$L = \frac{LS}{2} + M$$

Self-Supporting Capacity Diagram

The maximum length of the self-supporting capacity ($\frac{LS}{2}$) in relationship to the weight of the cables and hoses contained per linear metre.

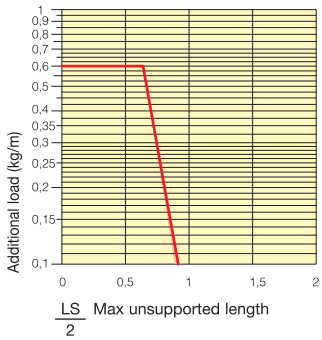

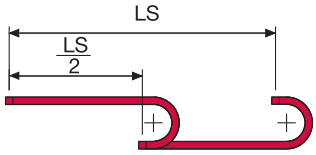

The red marking in the diagram area considers the difference of weight between various widths of chain.

For applications with $\frac{LS}{2}$ and weights not included in the area of the diagram showing self-supporting capacity, verify the possible use of support rollers (see page 30).

End Brackets

The end brackets set allows the two ends of the chain to be attached to the equipment.

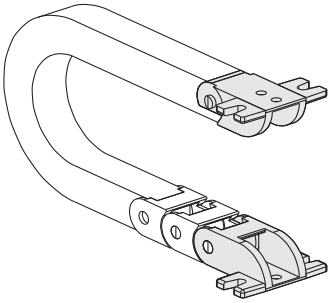

Fig. A
Chain fixed outside the radius. (Fig A)

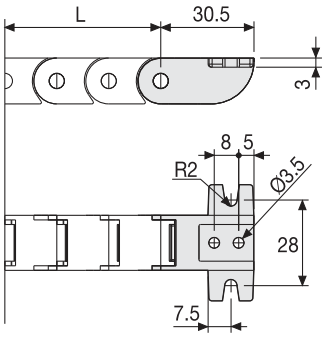

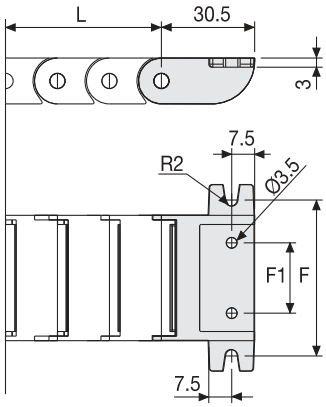

Chain Type	F1 mm	F mm
SR20025...	13	41
SR20035...	23	51

Nylon Type Part Numbers

Complete Set Assembled

Chain Type	End Brackets Set
SR20012...	**AN20012KM**
SR20025...	**AN20025KM**
SR20035...	**AN20035KM**

Complete Set Unassembled

Chain Type	End Brackets Set
SR20012	**AN20012K**
SR20025...	**AN20025K**
SR20035...	**AN20035K**

For further information please consult Brevetti Stendalto's Technical Office