KBK/BAI-10~1400

Safety Couplings

with Outer Cone and Inner Cone

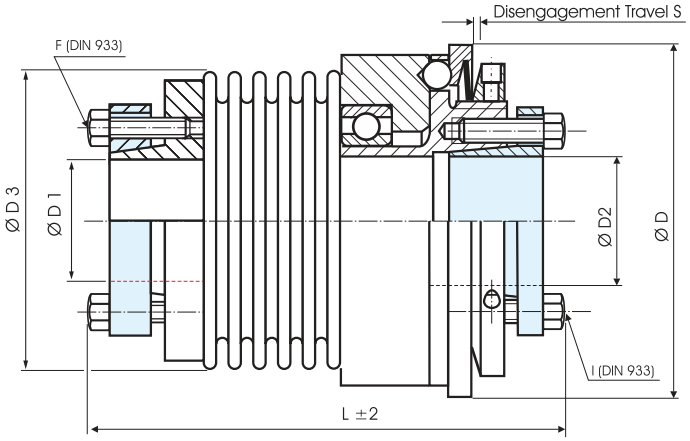

Order Code: KBK/BAI - 60 - 100 - 15H7 - 18H7 - 20Nm - C or D - 2

Type / Size | Length | Ø D2 (H7) | Ø D2 (H7) | Disengagement Torque | Overload Torque Range

C= Single Position D= Multi Position Engagement

KBK/BAI-x	Dimensions (mm)								Technical Ratings										
	ØD	L	ØD1	ØD2	ØD3	F	S	I	Maximum Speed	Mass	Moment of Inertia	Overload Torque adjustable		Spring Stiffness			Misalignment		
	Outer Ø	Length	Bore Size (H7) von~bis	Bore Size (H7) von~bis		Screw (DIN 933) T_A (Nm)		Screw (DIN 933) T_A (Nm)	rpm. (1/min)	(kg)	J (kg cm²)	1 T_{KN} (Nm)	2 T_{KN} (Nm)	torsional x10³ C_T (Nm/rad)	radial C_R (N/mm)	axial C_A (N/mm)	radial ΔK_r (mm)	axial ΔK_a (mm)	angular ΔK_w (°)
-10	49	65	5-14	6-14	40.5	M5	0.7	M3	11650	0.27	0.6	3-7	5-10	8.1	120	27	0.15	0.4	1.5
		74				5.9		1.5						6.8	29	17	0.3	0.6	2
-30	64	75	12-20	12-20	56	M5	1.2	M5	9540	0.75	3.1	5-15	10-30	38	720	50	0.15	0.6	1.5
		84				5.9		6						28	225	28	0.25	1	2
-60	79	89	15-32	15-25	66	M5	1.2	M6	8180	1.42	8.7	12-35	20-60	75	1150	90	0.15	0.6	1.5
		100				8.7		8.5						50	340	50	0.25	1	2
-80	94	108	20-35	20-35	82	M6	2	M6	6220	2.6	23	15-40	30-80	128	1200	80	0.2	0.5	1.5
		120				15		14						75	400	50	0.25	0.8	2
-150	94	108	20-35	20-35	82	M6	2	M6	6220	2.6	23	50-130	65-150	155	2020	145	0.2	0.5	1.5
		120				15		14						105	595	85	0.25	0.8	2
-200	109	110	20-42	20-40	90	M6	2	M6	5720	2.9	34	30-90	80-200	175	2500	147	0.2	0.5	1.5
		123				15		14						116	460	82	0.25	0.8	2
-300	119	133	25-50	25-50	110	M8	2	M8	5200	4.8	72	60-200	150-300	502	6300	280	0.2	0.5	1.5
		143				25		18						285	1400	145	0.25	0.8	2
-500	129	145	35-55	35-55	122	M8	2	M8	4470	6.8	121	80-250	200-500	690	7790	100	0.2	0.5	1.5
		157				36		26						320	970	85	0.25	1	2
-800	169	242	50-70	50-70	157	M12	2	M16	3350	17.8	515	240-600	500-800	700	500	185	0.2	0.8	1.8
						85		45											
-1400	169	242	50-70	50-70	157	M12	2	M16	3350	17.9	519	360-1000	900-1400	1270	700	275	0.2	0.8	1.8
						115		80											

- Material: Bellows: Stainless Steel Hubs: Steel (also available in Stainless Steel)
- Keyway acc. DIN 6885 optional
- Temperature Range: -30°C ~ 120°C