KBK/L-A-10~1400

Safety Coupling

with Outer Cone

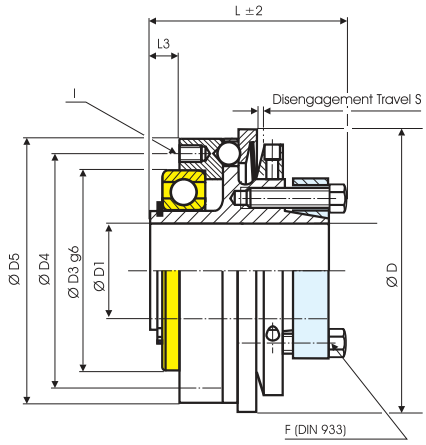

Order Code: KBK/L - A - 60 - 20H7 - 20Nm - C oder D - 2

Type - Size | Bore D1(H7) | Disengagement Torque | Overload Torque Range

Single Position =C | D= Multi Position Engagement

KBK/LA-x	Dimensions (mm)										Technical Ratings				
	Ø D	Ø D1	Ø D3	Ø D4	Ø D5	L	L3	S	I	F	Overload Torque adjustable		Maximum Speed	Mass	Moment of Inertia
	Outer Ø	Bore Size (H7) min ~ max				Length			6 x	Screw (DIN 933) T_A (Nm)	1 TKN (Nm)	2 TKN (Nm)	rpm. (1/min)	(kg)	J (kg cm²)
-10	49	5-14	37	42	47	37.5	5	0.7	M3	M5 / 5.9	3-7	5-10	12000	0.18	0.4
-30	64	12-20	47	53	60	46	6	1.2	M4	M5 / 5.9	5-15	10-30	9400	0.54	2.2
-60	79	15-32	62	69	75	66	8	1.2	M5	M5 / 8.7	13-35	20-65	7800	1.01	6.2
-80	94	20-35	68	80	90	68.5	10	2	M6	M6 / 15	15-40	30-80	6400	1.72	15
-150	94	20-35	68	80	90	68.5	10	2	M6	M6 / 15	50-130	65-150	5500	1.72	15
-200	109	20-42	80	90	105	74.5	10	2	M6	M6 / 15	30-90	80-200	5500	2	24
-300	119	25-50	90	102	115	83.5	10	2	M8	M8 / 25	60-200	150-300	5000	3.3	49
-500	129	35-55	100	112	125	89	10	2	M8	M8 / 36	80-250	200-500	4500	4.7	83
-800	169	50-70	110	125	165	118	15	2	M12	M12 / 85	260-600	500-900	3500	13.1	380
-1400	169	50-70	110	125	165	118	15	2	M12	M12 / 115	450-900	800-1400	3500	13.2	385

- Keyway acc. DIN 6885 optional
- Temperature Range: -30°C ~ 120°C