KBK/LL-K-2~500

Safety Coupling

with Collet Clamp and 2 Ball Bearings

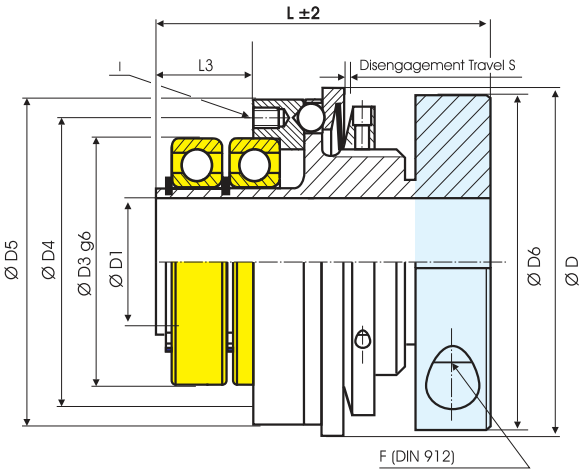

Order Code: KBK/LL - K - 60 - 20H7 - 20Nm - C oder D - 2

Type - Size | Bore D1(H7) | Disengagement Torque | Overload Torque Range

Single Position =C | D= Multi Position Engagement

KBK/LL-x	Dimensions (mm)											Technical Ratings				
	Ø D	Ø D1	Ø D3	Ø D4	Ø D5	Ø D6	L	L3	S	I	F	Overload Torque adjustable		Maximum Speed	Mass	Moment of Inertia
	Outer Ø	Bore Size (H7) min ~ max								6 x	Screw (DIN 933) TA (Nm)	1 TKN (Nm)	2 TKN (Nm)	rpm. (1/min)	(kg)	J (kg cm²)
-2	29	3-11	19	21	25	25	34	7	0.7	M2	M3 / 2	0.2-1.5	0.5-2	13200	0.07	0.06
-4.5	42	6-13	26	28	32	32	37	9	0.7	M2	M4 / 3.5	1-3	3-6	12300	0.13	0.22
-7	49	6-20	37	42	47	40	46	15	0.7	M3	M4 / 4.5	1-4	3-7	12000	0.21	0.5
-10	49	6-20	37	42	47	40	46	15	0.7	M3	M4 / 5.1	3-7	5-10	12000	0.21	0.5
-30	64	10-26	47	53	60	56	67.5	20	1.2	M4	M6 / 15	5-15	10-30	9400	0.67	2.8
-60	79	12-31	62	69	75	66	90	26	1.2	M5	M8 / 36	13-35	20-65	7800	1.2	7.3
-80	94	14-38	68	80	90	82	83	27	2	M6	M10 / 72	15-40	30-80	6400	2.7	23
-150	94	14-38	68	80	90	82	83	27	2	M6	M10 / 84	50-130	65-150	5500	2.7	23
-200	109	22-41	80	90	105	90	97	28	2	M6	M12 / 125	30-90	80-200	5500	3.3	39
-300	119	30-57	90	102	115	110	104	31	2	M8	M12 / 145	60-200	150-300	5000	4.9	73
-500	129	35-62	100	112	125	122	113	31	2	M8	M12 / 145	80-250	200-500	4500	7.0	125

- Keyway acc. DIN 6885 optional
- Temperature Range: -30°C ~ 120°C