ES2

PRESS FIT ELASTOMER WITH CLAMPING HUB

1 - 1,800 Nm

ABOUT

MATERIAL

- **Clutch system:** hardened steel
- **Hub D1:** up to size 450 high strength aluminum, size 800 and up steel
- **Hub D2:** up to size 60 high strength aluminum, size 150 and up steel
- **Elastomer insert:** wear resistant thermally stable TPU

ORDERING EXAMPLE

see page 105

DESIGN

Two clamping hubs with one clamping screw in each and concave driving jaws. Backlash free, vibration damping, electrically isolating elastomer insert press fit into the jaw sets. Clutch system: spring loaded ball-detent principle.

AVAILABLE FUNCTION SYSTEMS

- W = Single postion / automatic re-engagement (standard)
- D = Multi-position / automatic re-engagement
- G = Load holding / load blocking
- F = Full disengagement / manual re-engagement

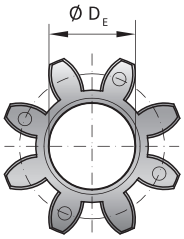

Size 5-800
elastomer insert
type A / B

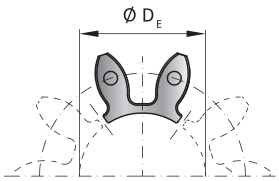

Size 1500
includes 5x elastomer segments type A / B

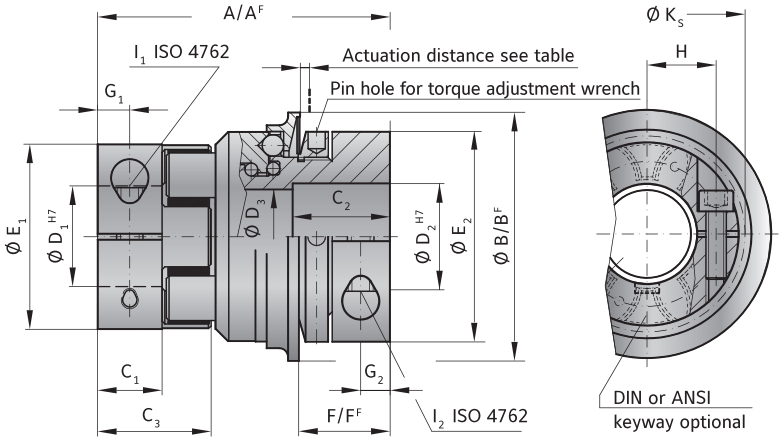

MODEL ES2

Size			5		10		20		60		150		300		450		800		1500	
Type (Elastomer insert)			A	B	A	B	A	B	A	B	A	B	A	B	A	B	A	B	A	B
Rated torque	(Nm)	T_{KN}	9	12	12.5	16	17	21	60	75	160	200	325	405	530	660	950	1100	1950	2450
Max. torque*	(Nm)	T_{Kmax}	18	24	25	32	34	42	120	150	320	400	650	810	1060	1350	1900	2150	3900	4900
Adjustment range possible from -to	(Nm)	T_{KN}	1-3 or 3-6		2 - 6 or 4 - 12		10 - 25 or 20 - 40		10 - 30 or 25 - 80		20 - 70 45 - 150 80 - 180		100 - 200 150 - 240 200 - 320		80 - 200 200 - 350 300 - 500		400 - 650 500 - 800 600 - 900		600 - 850 700 - 1200 1000 - 1800	
Adjustment range ("F" Version) possible from -to	(Nm)	T_{KN}^F	2.5 - 4.5		2 - 5 or 5 - 10		8 - 20 or 16 - 30		20 - 40 or 30 - 60		20 - 60 40 - 80 80 - 150		120 - 180 or 180 - 300		60 - 150 100 - 300 250 - 500		200 - 400 or 450 - 800		1000 - 1250 or 1250 - 1500	
Overall length	(mm)	A	50		60		86		96		106		140		164		179		245	
Overall length ("F" Version)	(mm)	A_F	50		60		86		96		108		143		168		190		257	
Actuation ring Ø	(mm)	B	35		45		65		73		92		120		135		152		174	
Outside diameter of actuation ring ("F" Version)	(mm)	B_F	42		51.5		70		83		98		132		155		177		187	
Clamping fit length	(mm)	C_1	8		10.3		17		20		21		31		34		46		88	
Fit length	(mm)	C_2	14		16		27		31		35		42		51		45		67	
Length of hub	(mm)	C_3	16.7		20.7		31		36		39		52		57		74		120	
Inside diameter from Ø to Ø H7	(mm)	D_1	4 - 12.7		5 - 16		8 - 25		12 - 32		19 - 36		20 - 45		28 - 60		35 - 80		35 - 90	
Inside diameter from Ø to Ø H7	(mm)	D_2	6 - 14		6 - 20		12 - 30		15 - 32		19 - 42		30 - 60		35 - 60		40 - 75		50 - 80	
Diameter Ø	(mm)	D_3	14.1		20.1		24.1		32.1		36.1		58.1		60.1		60.1		68.1	
Inside diameter (Elastomer insert)	(mm)	D_E	10.2		14.2		19.2		26.2		29.2		36.2		46.2		60.5		79	
Diameter of the hub	(mm)	E_1	25		32		42		56		66.5		82		102		136.5		160	
Diameter of the hub	(mm)	E_2	19		40		55		66		81		110		123		132		157	
Distance	(mm)	F	15		17		24		28		31		35		45		50		63	
Distance ("F" Version)	(mm)	F_F	14		16		22		29		30		35		43		54		61	
Distance	(mm)	G_1	4		5		8.5		10		11		15		17.5		23		36	
Distance	(mm)	G_2	5		5		7.5		9.5		11		13		17		18		22.5	
Distance between centers	(mm)	H_1	8		10.5		15		21		24		29		38		50.5		2x 57	
Screws (ISO 4762)		I_1	M3		M4		M5		M6		M8		M10		M12		M16		2x M16	
Tightening torque	(Nm)	I_1	2		4.5		8		15		35		70		120		290		300	
Distance between centers D2 side	(mm)	H_2	10		15		19		23		27		39		41		48		2x 55	
Screws (ISO 4762)		I_2	M4		M4		M6		M8		M10		M12		M16		2x M16		2x M20	
Tightening torque	(Nm)	I_2	4		4.5		15		40		70		130		200		250		470	
Diameter with screwhead	(mm)	K_S	25		32		44.5		57		68		85		105		139		155	
Approx. weight	(kg)		0.2		0.3		0.6		1.0		2.4		5.8		9.3		14.3		26	
Moment of inertia	(10^{-3} kgm²)	J_{ges}	0.02		0.06		0.25		0.7		2.3		11		22		33.5		185	
Actuation distance	(mm)		0.8		1.2		1.5		1.7		1.9		2.2		2.2		2.2		3.0	

For information on shaft misalignment, torsional stiffness, and other details about the elastomer inserts see page 105. A^F, B^F, L^F = Full disengagement / manual re-engegement version (F)
* Maximum transmittable torque of the clamping hub depends on the bore diameter see table on page 105.