SLE

PRESS FIT ELASTOMER WITH CLAMPING HUB

10 - 700 Nm

ULTRALIGHT DESIGN

ABOUT

DESIGN

Clamping collar with clamping screw. Clamping hub with concave driving jaws and clamping screw. Backlash free, vibration damping, electrically isolating elastomer insert press fit into the jaw sets. Clutch system: spring loaded ball-detent principle, in a special compact, low inertia design.

AVAILABLE FUNCTION SYSTEMS

- W = Single postion / automatic re-engagement (standard)
- D = Multi-position / automatic re-engagement

ORDERING EXAMPLE

see page 105

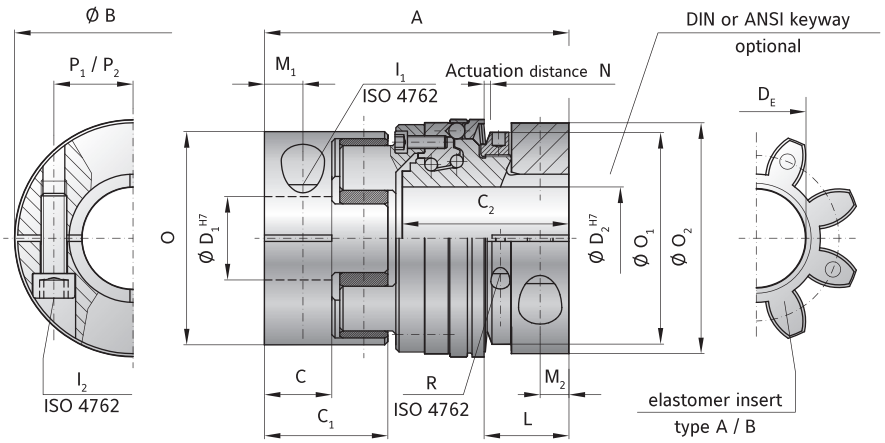

MODEL SLE

SIZE		30		60		150		300	
Type (elastomer insert)		A	B	A	B	A	B	A	B
Rated torque	T_{KN}	60	75	160	200	325	405	530	660
Max. torque	$T_{KN\ max}$	120	150	320	400	650	810	1060	1350
Adjustment range* possible from -to (Nm)	T_{KN}	10-35 30-80 40-135		30-80 60-120 100-200		40-100 100-200 150-300		200-350 300-450 400-550 550-700	
Overall length (mm)	A	85		93		122		135	
Actuation ring diameter (mm)	B	63		74		92		118	
Hub length (coupling hub end) (mm)	C/C_1	20 / 36		21 / 39		31 / 52		34 / 57	
Length of hub (torque limiting portion)	C_2	45		53		63		72	
Bore diameter from Ø to Ø H7 (mm)	D_1/D_2	12-32 /12-30		16-36 / 16-35		19-45 / 19-42		22-60 / 22-60	
Inner diameter (elastomer insert)	D_E	26.2		29.2		36.2		46.2	
ISO 4762 screw, coupling side / torque limiter side	I_1/I_2	M6		M8		M10		M12	
Tightening torque (Nm)	I_1/I_2	15		40		75		130	
Distance to actuation ring edge (mm)	L	22		26		32		35	
Distance (mm)	M_1/M_2	10 / 7.5		12 / 9		15 / 11		17.5 / 12	
Actuation distance (mm)	N	1.3		1.5		1.8		2	
Clamping hub Ø, elastomer coupling	O	56		66.5		82		102	
Ø Adjustment nut	O_1	55		66		82		100	
Clamping hub Ø, safety coupling	O_2	59		72		90		112	
Distance to clamping screw, coupling side / torque limiter side	P_1/P_2	21 / 21.5		24 / 25		29 / 33		38 / 41	
Adjustment nut's clamp screw ISO 4762	R	M3		M3		M3		M4	
Tightening torque (Nm)	R	2		2		2		4.5	
Approx. weight (kg)		0.4		0.8		1.5		2.9	
Approx. moment of inertia at D max.(10^{-3} Kgm²)	J_{ges}	0.3		1		1.8		5	
Static torsional rigidity (Nm/rad)		3290	9750	4970	10600	12400	18000	15100	27000
Dynamic torsional rigidity (Nm/rad)		7940	11900	13400	29300	23700	40400	55400	81200
Lateral ± approx. (mm)		0.12	0.1	0.15	0.12	0.18	0.14	0.2	0.18