MK5 BLIND MATE CONNECTION WITH CLAMPING HUB 0.5 - 10 Nm

ABOUT

FEATURES
- easy installation and removal
- electrically and thermally isolating
- absolutely backlash free assembly

MATERIAL
- **Bellows:** high grade stainless steel
- **Hubs:** aluminium
- **Tapered male segment:** high strength plastic

DESIGN
Two clamping hubs, one of which has a tapered male projection for bind mate connection.

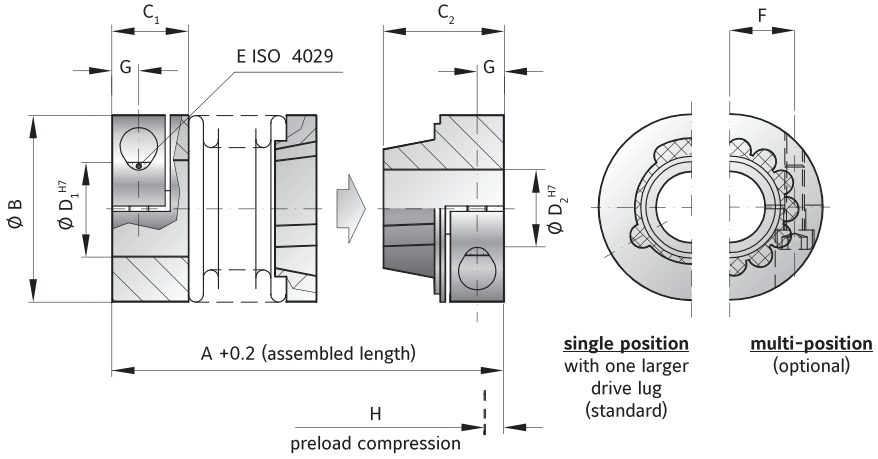

MODEL MK5

SIZE			5			15		20			45		100	
Rated torque	(Nm)	T_{KN}	0.5			1.5		2			4.5		10	
Overall length (inserted)	(mm)	$A^{+0,2}$	27	30	33	34	39	37	43	46	49	57	55	65
Outside diameter	(mm)	B	15			19		25			32		40	
Fit length	(mm)	C_1	9			11		13			16		16	
Fit length	(mm)	C_2	12			14		16			20		21.5	
Inside diameter possible from Ø to Ø H7	(mm)	$D_{1/2}$	3-6.35			3-8		3-12.7			5-16		5-20	
Fastening screw ISO 4762		E	M2			M2.5		M3			M4		M4	
Tightening torque of the fastening screw	(Nm)	E	0.43			0.85		2.3			4		4.5	
Distance between centerlines	(mm)	F	4.5			6		8			10		15	
Distance	(mm)	G	3			3.5		4			5		5	
Preload compression	(mm)	H	0.4			0.5		0.5			0.7		1	
Axial recovery force at max. preload compression	(N)		5	3	2	4	3	3	4	3	15	10	25	30
Moment of inertia	(gcm^2)	J_{ges}	3.0	3.2	3.5	9.0	10	28	30	33	110	120	220	230
Torsional stiffness	(Nm/rad)	C_T	280	210	170	750	700	1200	1300	1200	7000	5000	9050	8800
Axial*	(mm)	Max. values	0.4	0.5	0.6	0.5	0.7	0.5	0.6	0.7	0.7	1	1	1.2
Lateral	(mm)	Max. values	0.15	0.2	0.25	0.15	0.2	0.15	0.2	0.25	0.2	0.25	0.2	0.3
Angular	(degree)	Max. values	1	1.5	2	1.5	1.5	1.5	1.5	2	1.5	2	1.5	2

* in addition to maximum pretensioning

ORDERING EXAMPLE	MK5	20	37	6	9.53	XX
Model	●					Special designation only (e.g. special bore tolerance).
Size		●				
Overall length mm			●			
Bore D1 H7				●		
Bore D2 H7					●	

For custom features place an XX at the end of the part number and describe the special requirements (e.g. MK5 / 20 / 37 / 6 / 9.53 / XX; XX=finely balanced for 25,000 rpm)